TWO BOARD BAT HOUSE

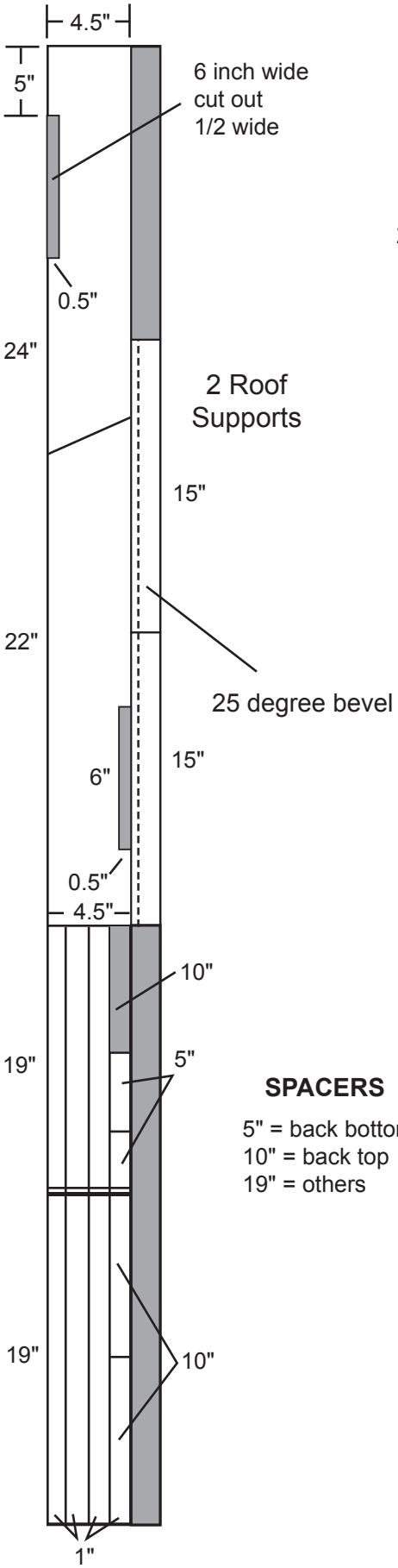

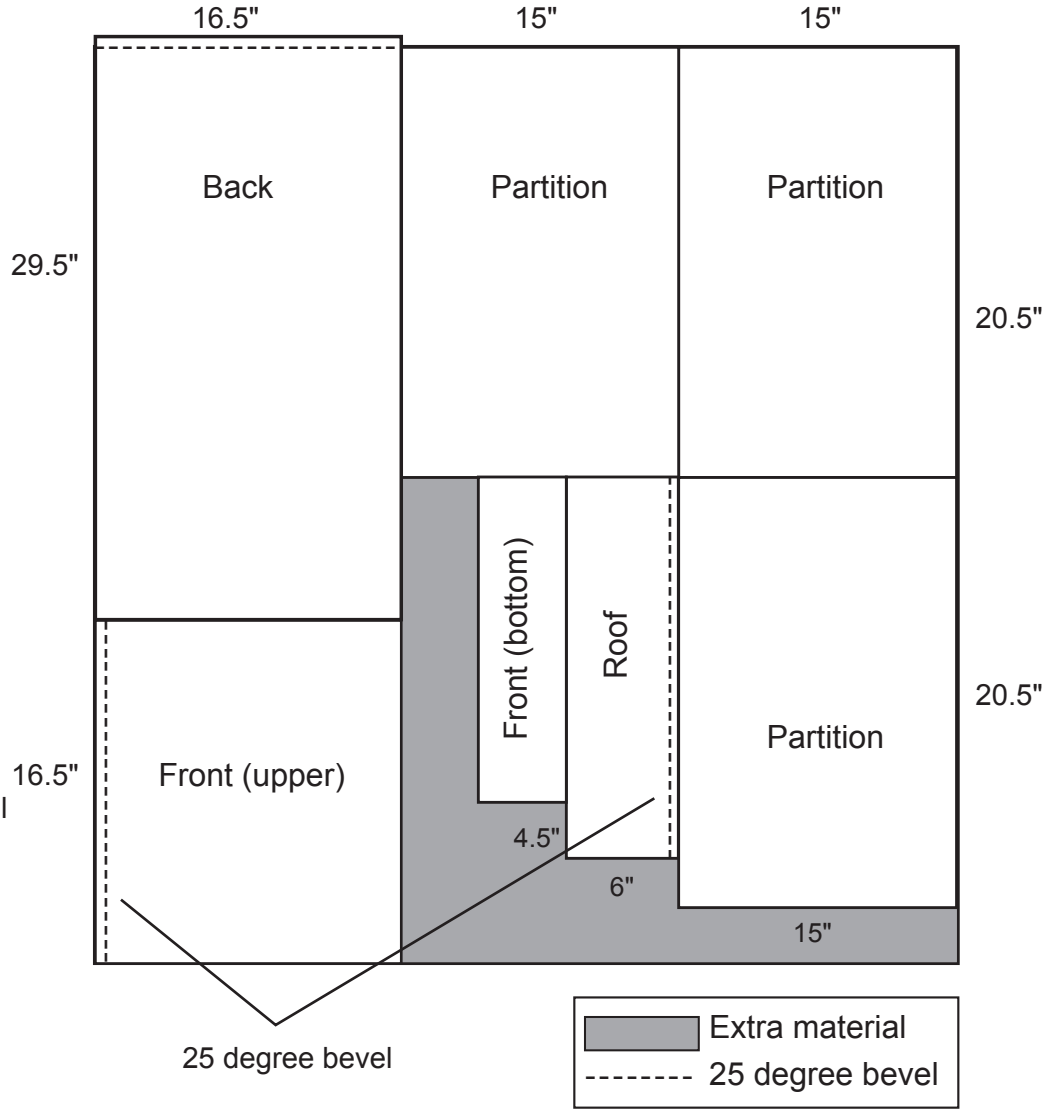

SPACERS

5" = back bottom
10" = back top
19" = others

MATERIALS

1/2 sheet (4'X4') 1/2" CDX (outdoor grade) plywood
1 piece 1" X 6" X 8" pine or cedar
1/8" mesh HDPE (plastic) netting 7' X 36"
1ILB. 15/8" multipurpose (drywall) screws
1 quart latex acrylic paint
1 tube paintable acrylic caulk
5/16" staples

TOOLS

Table saw or circular saw
Scissor
Stapler
Paint Brush
Tape measure
Caulking gun
Bar clamp (optional)
Sander (optional)
Variable speed reversing drill with Phillips bit